Roof Downblast Exhaust
Size-100: GB • G
Previously Size- GB-101 • G-103

GREENHECK
Building Value in Air.

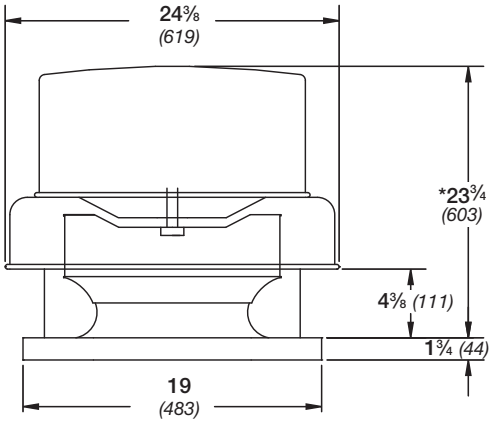

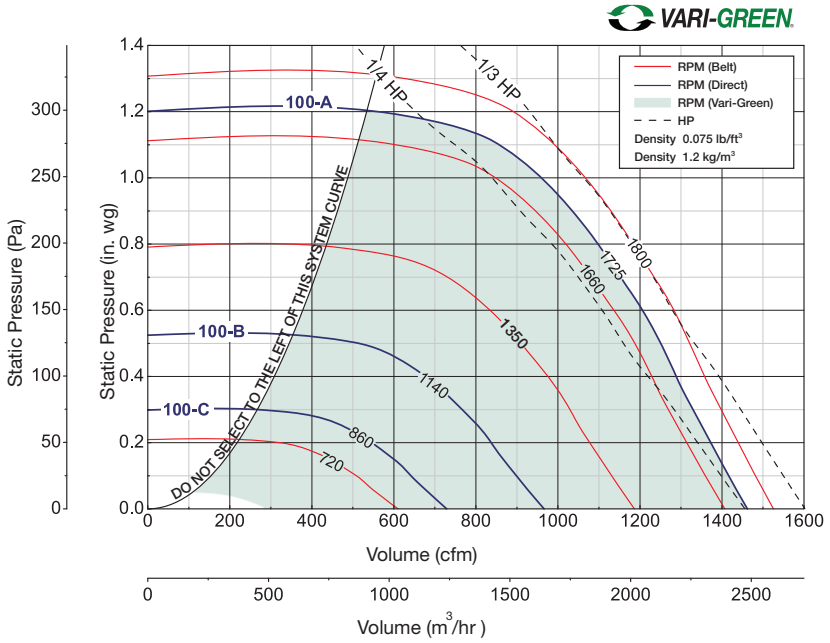

Damper Size = 12 x 12 *(305 x 305)*
Roof Opening = 14½ x 14½ *(368 x 368)*
Shroud Thickness = 0.051 *(1.3)*
Motor Cover Thickness = 0.040 *(1.0)*
Curb Cap Thickness = 0.064 *(1.6)*
^Approximate Unit Weight G/GB = 54/61 lbs. *(24/28 kg)*

All dimensions in inches *(millimeters)*. *May be greater depending on motor. ^Weight shown is largest cataloged Open Drip-Proof motor.

Direct Drive RPM

C-860 RPM	B-1140 RPM	A-1725 RPM	VG-1725 RPM

Motor HP Belt	Motor HP Direct		Fan RPM		Static Pressure in Inches wg 0	0.125	0.25	0.375	0.5	0.625	0.75	0.875	1	1.25
100														
1/4	VG-1/4 VARI-GREEN		720	CFM	610	477								
				BHP	0.02	0.02								
				Sones	3.8	2.7								
		C-1/8	860	CFM	729	623	473							
				BHP	0.03	0.04	0.04							
				Sones	4.6	3.7	2.9							
			1000	CFM	848	753	654	481						
				BHP	0.05	0.05	0.06	0.05						
				Sones	5.5	4.8	4.4	3.4						
		B-1/6	1140	CFM	966	883	805	702	507					
				BHP	0.07	0.08	0.09	0.09	0.08					
				Sones	6.6	6.0	5.7	5.2	4.1					
			1245	CFM	1055	978	908	824	715					
				BHP	0.10	0.10	0.11	0.11	0.11					
				Sones	7.5	7.0	6.7	6.3	5.7					
			1350	CFM	1144	1073	1006	938	851	731				
				BHP	0.12	0.13	0.13	0.14	0.14	0.14				
				Sones	8.5	8.1	7.8	7.7	7.2	6.7				
			1450	CFM	1229	1162	1099	1041	965	878	750			
				BHP	0.15	0.16	0.16	0.17	0.17	0.17	0.17			
				Sones	9.3	9.0	8.7	8.4	8.0	7.5	6.9			
			1555	CFM	1318	1255	1196	1140	1079	1005	917	791		
				BHP	0.19	0.19	0.20	0.21	0.22	0.22	0.22	0.21		
				Sones	10.2	10.0	9.7	9.4	8.9	8.4	8.0	7.5		
			1660	CFM	1407	1348	1292	1238	1187	1122	1050	963	841	
				BHP	0.23	0.23	0.24	0.25	0.26	0.26	0.26	0.26	0.25	
				Sones	11.4	11.1	10.7	10.4	10.1	9.6	9.1	8.7	8.1	
1/3		A-1/4	1725	CFM	1462	1405	1351	1298	1250	1193	1126	1052	955	
				BHP	0.25	0.26	0.27	0.28	0.29	0.29	0.29	0.29	0.29	
				Sones	12.2	11.9	11.5	11.2	10.9	10.3	10.0	9.5	9.0	
			1800	CFM	1525	1471	1419	1368	1321	1270	1209	1142	1065	793
				BHP	0.29	0.30	0.30	0.31	0.33	0.33	0.33	0.33	0.33	0.30
				Sones	13.3	12.8	12.5	12.4	12.2	11.4	10.9	10.6	10.2	9.3

MAXIMUM BHP AT A GIVEN RPM = $(RPM/2593)^3$
MAXIMUM RPM = 1800
TIP SPEED (ft/min) = RPM x 2.913
MAXIMUM MOTOR FRAME SIZE = 56

Performance certified is for installation type A: Free inlet, Free outlet. Power rating (BHP) does not include transmission losses. Performance ratings include the effects of a birdscreen. The sound ratings shown are loudness values in hemispherical sones at 5 ft. (1.5 m) in a hemispherical free field calculated per AMCA Standard 301. Values shown are for installation type A: free inlet hemispherical sone levels.